

G.C.E. (A/L) Examination – October 2021

Information & Communication Technology (ICT)

Conducted by the Education Department – Northern Province

Do not write in this column

தகவல் தொடர்பாடல் தொழினுட்பவியல் II Information & Communication Technology II	*Time: Three hours*	20	E	A

Part – II A Structure Questions

Write down answers for all four questions on this sheet

1.

(a) Give the expected outputs of the following HTML code segments in the box given below when it is rendered by a web browser.

(i)

```
<!DOCTYPE html>
<html>
<body>
<form>
  <input type="radio" id="html" name="fav_language" value="HTML" checked>
        <label for="html"> HTML </label><br>
        <input type="radio" id="css" name="fav_language" value="CSS">
        <label for="css"> CSS </label><br>
        <input type="radio" id="javascript" name="fav_language" value="JavaScript">
        <label for="javascript"> JavaScript </label>
</form>
</body>
</html>
```

(ii)

```
<!DOCTYPE html>
<html>
<body>
<ul>
  <li> Organ </li>
  <li> Guitar
    <ul>
      <li> Acoustic Guitar </li>
      <li> Electric Guitar </li>
    </ul>
  </li>
  <li> Drum </li>
</ul>
</body>
</html>
```

Do not write in this column

(b) Consider the following HTML/CSS code segment.

```
<html>
<head>
<style type="text/css">
* {
    text-align: center;
    color: blue;
}
</style>
</head>
<body>
  <h1 align="left"> Cascading Style Sheet </h1>
  <p align="right"> Enriched webpages </p>
  <div id="para"> Division </div>
</body>
</html>
```

(i) Write down the suitable terms for the labels given from ❶ to ❹ above by choosing from the following list.

Do not write in this column

❶……

❷……

❸……

❹……..……..

List: [External stylesheet, Property, ID selector, Inline stylesheet, CSS declaration, Class selector, Internal stylesheet, Universal selector, Value]

(ii) When the above HTML/CSS code is executed, based on the output obtained, fill in the blanks in the following columns of the table.

Text	**Color (write down blue or not)**	**Alignment (write down center, left, right, or justify)**
Cascading Style Sheet		
Enriched webpages		
Division		

(c) Consider the following PHP script. Write down the suitable terms for the labels given from ① to ⑥ above by choosing from the following list.

```
<?php
    $conn = new ①("localhost”,”root”,”admin”,”myDB”);
    if ($conn->②)
    {
      die("Connection failed: " . $conn->connect_error);
    }
    $sql = "UPDATE MyGuests SET lastname='Doe' WHERE id=2";
    if ($conn->③($sql) === TRUE)
    {
      echo "④";
    }
    else
    {
      ⑤ "Error updating record: " . $conn->error;
    }
    $conn->⑥;
?>
```

Labels	Terms from the list
①	
②	
③	
④	
⑤	
⑥	

Do not write in this column

List: [*query, echo, Record updated successfully, close(), mysqli, connect_error*]

2.

(a) The following Python code segments for selecting records from a database are given. They are not given in execution order. Write down the code line number in execution order in the blanks given below (write down only the labels).

No.	Lines of source code
❶	*ex = conn.cursor()*
❷	*res = ex.fetchall()* *for i in res:* *print(i)*
❸	*ex.execute("SELECT * FROM employee")*
❹	*import mysql.connector* *conn = mysql.connector.connect(host="localhost", user="root", password="admin", database="myDB")*

1……

2……

3……

4……

(b) Consider the following Python program.

```
L = [12, 67, 98, 34]
res = []
for i in L:
    sum = 0
    for digit in str(i):
        sum = sum + int(digit)
    res.append(sum)
print(str(res))
```

(i) Write down the output of this Python program.

…..…….

(ii) State the purpose of this Python program briefly.

……

……

(c) Consider the following statements about data communication and computer networks. Choose the suitable words to fill the blanks in from the list given below.

(i) ……. conserves IP addresses by enabling private IP networks using unregistered IP addresses to use the Internet.

(ii) …….. is a network security device that monitors and filters incoming and outgoing network traffic based on an organization's previously determined security policies.

(iii) …….. is a type of social engineering attack often used to steal user data, including login credentials and credit card numbers by masquerading as a trusted entity.

(iv) ……. is malware that employs encryption to hold a victim's information so that they cannot access files and a money is then demanded to provide access.

(v) ……. is the technology that is able to combine multiple communication signals together in order for them to traverse an otherwise single signal communication medium simultaneously.

(vi) ……. is the traditional technology for connecting devices in a wired local area network (LAN) enabling them to communicate with each other via a protocol.

[**list :** DNS, Phishing, FTP, Ransomware, ALOHA, Ethernet, Firewall, Router, Trojan horse, NAT, Multiplexing, UDP]

Do not write in this column

3.

(a)

(i) Write down two advantages of database normalization.

……

……

(ii) In a delivery company, each driver may drive any van, and each van may be driven by any driver. The following database table records the distance driven by each driver in each van.

DriverID	VanID	DriverName	VanMake	Mileage
D01	V03	Selvam	Ford	350
D02	V01	Silva	Mercedes	800
D01	V01	Selvam	Mercedes	200

Transform the table given into third normal form (3NF).
Clearly indicate the primary key in each table you might create.

……

……

……

…..…….

(b) Match each of the given phrases from **(i)** to **(vi)** relating to e-commerce with the most suitable item from the list given below:

List: [affiliate revenue model, reverse auction, e-marketing, web portal, B2C model, virtual storefront, brick-and-mortar business, competitive advantage, subscription as a revenue model, Information broker, mobile marketing, database marketing]

Phrases:

(i) It is an online marketing technique focused at reaching a specific audience on their smartphones, tablets, etc. through websites, e-mail, SMS, social media.

(ii) It refers to factors that allow a company to produce goods or services better or more cheaply than its rivals.

(iii) It generates revenue by charging customers a recurring fee that is processed at regular intervals.

(iv) It is a specially designed website that brings information from diverse sources, like e-mail, online forum, and search engine in a uniform way.

Do not write in this column

(v) It is a process of planning and executing the distribution, promotion, and pricing of products and services in a computerized, networked environment, such as the Internet and world wide web to facilitate exchanges and satisfy customer demands.

(vi) It is often used to refer to a company that possesses retail shops or warehouses for its business operations.

Write down the most matching phrase in the table below.

(i)	
(ii)	
(iii)	
(iv)	
(v)	
(vi)	

(c)

(i) Consider the following types of software testing. They are not given in order of software testing sequence.

A - System testing
B - Unit testing
C - User acceptance testing
D - Integration testing

Write down the characters from A to D in order in the blanks given below (write down only the labels).

1……
2……
3……
4……

(ii) Various software process models are used to develop software in different domains. All software process models have its own advantages and disadvantages in comparison to others. Write down one disadvantage of waterfall model over spiral model.

……..
……..

Do not write in this column

4.

Do not write in this column

(a) State each of the following statements regarding operating system whether it is **True**, if it is correct, or **False**, if it is incorrect.

(i) Program is a process in an execution.

(ii) Program counter indicates the address of the next instruction to be executed for the process.

(iii) Switching the CPU to another process requires performing a state save of the current process and a state restore of a different process is known as swapping.

(iv) Virtual memory is a technique that allows the execution of processes that are not completely in memory.

(v) In preemptive scheduling, the CPU is allocated to the process till it terminates or switches to waiting state.

(vi) The short-term scheduler decides which processes are to be admitted to the ready queue.

Write down answers in the following blanks.

(i) ……

(ii) ……

(iii) ……

(iv) ……

(v) ……

(vi) ……...

(b)

(i) Consider the following incomplete process control block (PCB) diagram. Write down any four appropriate information that PCB consists to fill in the blank boxes in this diagram.

ProcessID
……

(ii) In operating system, write down two reasons for the process termination or exit.

Do not write in this column

……

……

(c) If a computer system is byte addressable. It consists of 64 MB size of physical memory and it uses 4GB size of virtual memory space. Size of a page is 4KB, Calculate the followings.

(i) Number of pages.

……

……

(ii) Number of frames.

……

……

(iii) Number of entries required for the page table.

……

……

****

Part – II B
Answer any four questions only.

(5) Consider the following combinational logic gate.

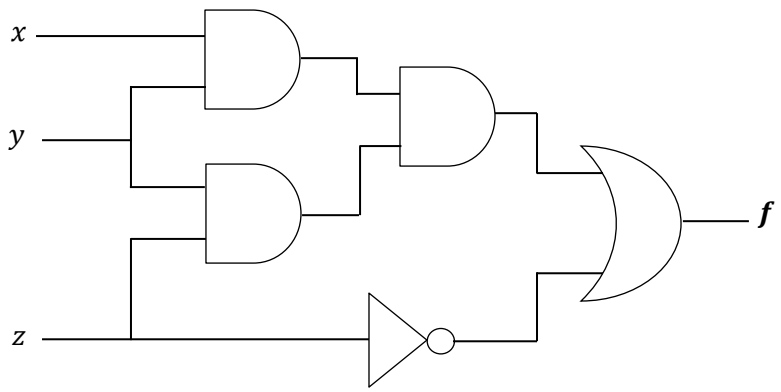

(a) Derive the output ***f*** for this logic circuit.
(b) Construct truth table for the output ***f***.
(c) From the truth table, derive a Boolean expression in the form of SOP (sum of products).
(d) From the truth table, derive a Boolean expression in the form of POS (Product of sums).
(e) Re-draw the logic circuit given above using NAND gates only.

(6)
(a) The following diagram depicting the components of an ADSL network indicating the equipment at home.

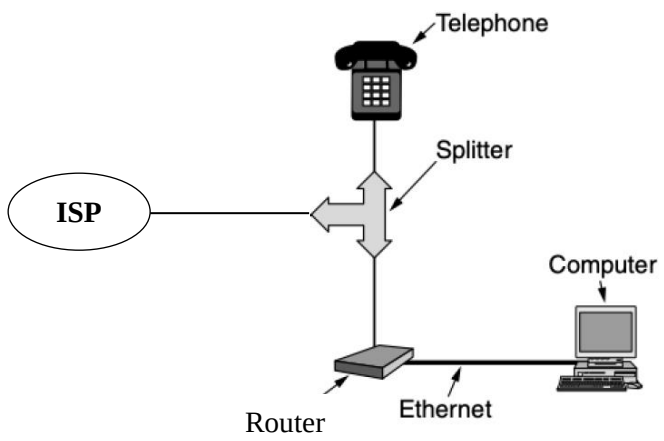

(i) Write down a possible reason to have asymmetric (high downlink and low uplink) bandwidth in a typical ADSL connection given to home users?

(ii) The equipment commonly named as a "router" at the home end of an ADSL network is much more than a router. Write down a possible main functionality of this equipment?

(iii) Write down a possible reason why the splitter is used in this line?

(b) Consider the following scenario.

A small-scale toffee manufacturing company has five local area networks (LANs) for each of its departments such as information system, manufacturing, sales & marketing, logistics and accounting. Each department consists of the number of computers as follows in the table given.

Departments	**Number of computers in each department**
Information system	22
Manufacturing	23
Sales & marketing	24
Logistics	21
Accounting	20

An IP block 192.168.9.0/24 is given to the network administrator. The network administrator is required to allocate IP addresses for all nodes in each department. Five subnets are to be setup for this purpose and this network is connected to a public IP address for the Internet usage of the employees. Each department is situated in different building in an area. Each department has a network printer separately. A firewall is installed for network security and five switches, network cables, proxy server and DHCP server are given to the network administrator for this purpose. Information system department is connected directly to the Internet.
Draw a network diagram for this scenario. Show all the IP addresses, network connectivity devices and servers clearly.
Use the following table as a help to allocate IP addresses.

Departments	**Network address**	**Broadcast address**	**Subnet mask**	**Usable IP address range**
Information system	*192.168.9.0*	*192.168.9.31*	*255.255.255.224*	*192.168.9.1 - 192.168.9.30*
Manufacturing				
Sales & marketing				
Logistics				
Accounting				

(7)

(a) A book publication company "e-Reader" publishes a various type of periodicals. It is in the sales of periodicals over the brick business basis currently. It aims to improve its sales by using e-commerce.

(i) What is the e-business model that the e-Reader sells periodicals to the readers via online? Justify the answer.

(ii) Explain two benefits that the e-Reader obtains by e-business when it switches from brick business.

(iii) Give any two online payment methods that customers are able to pay their payments.

(iv) Write down three e-revenue models that the e-Reader is able to use.

(v) If the e-Reader facilitates the delivery of e-books to the customers, specify with justification which category it belongs to out of pure brick, brick and click or pure click.

(b) The following is an application of a Medical Agent Software - MAS used by a reputed hospital. It consists of user agent, resource agent, physician agent, knowledge-based data server and external services. This diagram focuses on new technology being developed to provide the next generation of healthcare service. Specifically, technology using the MAS approach that allows elderly citizens to maintain their independent lifestyle is examined.

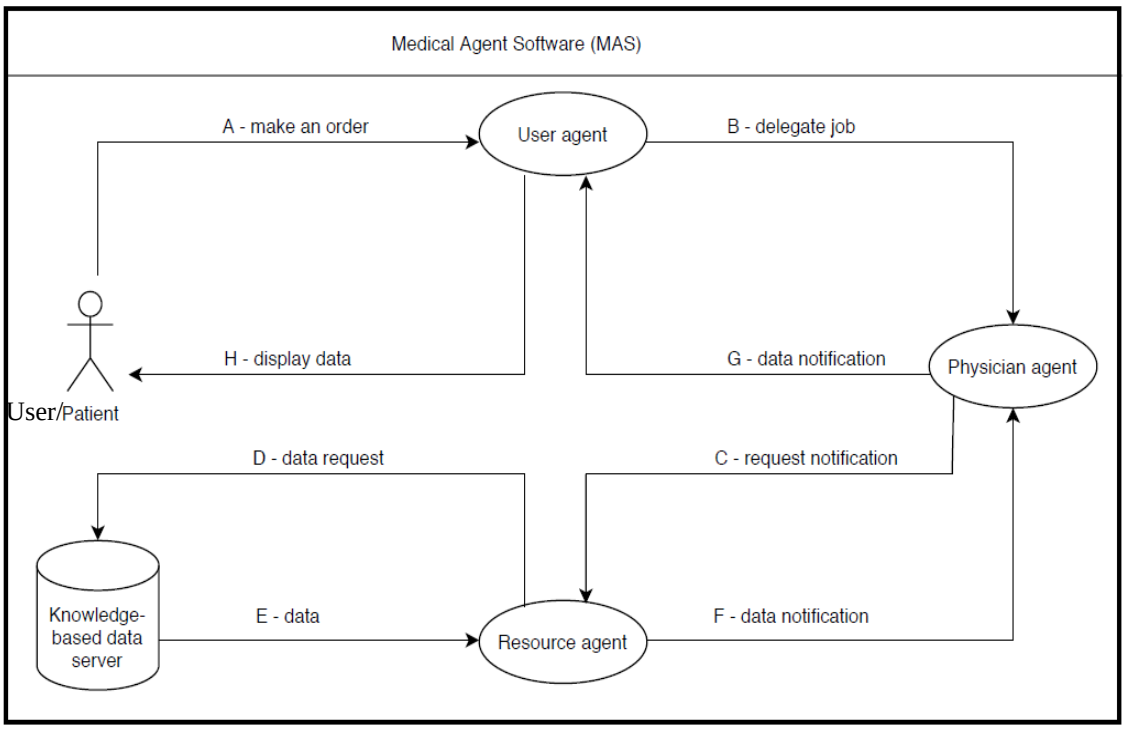

User agents act as an intelligent gateway interface for physicians and patients based on user request. The Resource agent mediates agents' access to resources within the system. The Physician agent is a mobile agent used by medical staff to perform tasks. The Knowledge-based data server consists of repositories that are used to store physiological information collected by a

physician agent. It contains collected information relating to the patient physical status (i.e., heart rate) and up-to-date electronic records for patients. When the resource agent receives patient' monitoring data, it stores the data in the repository and sends a copy to the diagnostic agent for analysis.

Answer the following questions using the diagram given above.

(a) Write down name(s) of self-autonomous software agent.

(b) "User agent is a self-autonomous agent". Is this statement correct? Justify your answer.

(c) "This application consists of multi-agent environment". Do you agree this statement? Justify your answer.

(d) To improve this application, a diagnostic agent can be introduced here. State one reason in favour of that.

(8)

(a) Consider the following scenario.

A popular music band has decided to store information about musicians who perform on its albums in a digital database. Each musician has musicianID, name, address, and phone number. Each instrument used in songs recorded has an instrumentID, and name. Each album recorded has albumID, title, and copyrightDate. Each song recorded has title and musicianName. Each musician may play several instruments, and a given instrument may be played by several musicians. Each album has a number of songs on it, but no specific song may appear on more than one album. Each song is performed by one or more musicians, and a musician may perform a number of songs. Each album has exactly one musician who acts as its producer. A musician may produce several albums.

Construct a single ER diagram for the above-mentioned scenario and identify attributes and associate them with entity or relationship types and mark primary key attributes for each entity. State any assumptions necessary to support your design.

(b) Consider the following relational database table 'Customer'. It consists of details about some customers. Based on the table given, write down SQL statements for the followings.

CustomerID	CustomerName	ContactNo	City
1	Ragavan	0212224243	Jaffna
2	Nimlakha	0777262533	Galle
3	Alwis	0765343431	Kandy
4	Pieris	0118377372	Colombo
5	Ranjani	0776353554	Jaffna

(i) Displaying all the details of the customers who live in Jaffna.

(ii) Adding a new column "CustomerStatus" in the table.

(iii) Finding names of the customers only whose names begin with "R".

(9)

(a) Write down one advantage of using user-defined function in computer programming.
(b) A user enters a subject mark. Based on the following conditions, the result should be displayed.

Conditions	Result
Marks greater than or equal to 75	A
Marks greater than or equal to 60	B
Marks greater than or equal to 50	C
Marks greater than or equal to 35	S
Marks greater than or equal to 0	W

(i) Draw a flowchart for this problem.
(ii) Write down a Python program for this algorithm drawn in **(i)** by using a user-defined function "marks_calc".
(iii) If the user enters 105 and -5 marks separately, what would be the output in each situation?
(iv) The program written above is to be improved with validation of subject marks. The output should be displayed "Invalid marks. Try again" when the inputs are given like in **(iii)** above. Write down a Python code segment to show this output message (No need to write full Python program again).

(10)
(a)

(i) Compare and contrast the direct and parallel implementations strategies used in software development deployment stage (state one comparison).

(ii) Write down a difference between validation and verification in software testing.

(b) Consider the following scenario.

A popular hotel uses an online hotel reservations system. This system will help guests schedule the dates and length of stay allowing them to choose their rooms at time of booking and take payments from them. Some of the functional and non-functional requirements of this system are given below.

(A) The system should be able to calculate and display accommodation charges.

(B) The system shall be able to enable guests to search and find the most relevant booking options.

(C) The search results shall be able to obtain within acceptable time limits.

(D) The system should be able to use encryption to avoid bots from booking automatically.

(E) The system should be able to send booking confirmation to the specified contact details.

(F) The system should be easy to use, efficient and accessible.

(G) The system should be able to accept payments via various payment methods.

(H) Guests shall be able to cancel their bookings.

Classify the user requirements of the online hotel reservations system as functional or non-functional requirements separately mentioned above (it is sufficient to write only their labels).

(c) Consider the following scenario about medical appointments system.

Patients are registered with a local health center. The center employs a number of doctors and a few receptionists. Patients are officially registered with one doctor.

When a new patient is registered, the patient provides his/her details such as name, date of birth, address, etc., to the receptionist and receptionist registers patient and provides a unique patient number to the patient. These patients' details are recorded on the patient's record.

To book an appointment, a patient should contact a receptionist. The patient provides his/her unique patient number and the receptionist provides a list of available time slots for appointments. The appointment is booked with a doctor. All appointment details are recorded on the appointment schedule record. The date and time of the booked appointment are given to the patient.

A patient who attends an appointment should check in first using a special terminal located in the waiting area of the Health Centre. The patient inputs his/her number. The system checks the details and confirms that the patient has been checked in.

Doctors process appointment outcomes and details of prescriptions (if any) during the appointments issued by doctors are recorded on the patient's record.

Draw a level -1 data flow diagram of the medical appointments system clearly.

****