ශ්‍රී ලංකා විභාග දෙපාර්තමේන්තුව
இலங்கைப் பரீட்சைத் திணைக்களம்
Department of Examinations, Sri Lanka

89 | E | I, II

අධ්‍යයන පොදු සහතික පත්‍ර (සාමාන්‍ය පෙළ) විභාගය, 2019 දෙසැම්බර්
கல்விப் பொதுத் தராதரப் பத்திர (சாதாரண தர)ப் பரீட்சை, 2019 டிசெம்பர்
General Certificate of Education (Ord. Level) Examination, December 2019

නිර්මාණකරණය හා යාන්ත්‍රික තාක්ෂණවේදය I, II
வடிவமைப்பும் இயந்திரத் தொழினுட்பவியலும் I, II
Design and Mechanical Technology I, II

06.12.2019 / 0830 - 1140

පැය තුනයි
மூன்று மணித்தியாலம்
Three hours

අමතර කියවීම් කාලය - මිනිත්තු 10 යි
மேலதிக வாசிப்பு நேரம் - 10 நிமிடங்கள்
Additional Reading Time - 10 minutes

Use **additional reading time** to go through the question paper, select the questions and decide on the questions that you give priority in answering.

Design and Mechanical Technology I

Note :

(i) *Answer **all** questions.*

(ii) *In each of the questions **1** to **40**, pick one of the alternatives* (1), (2), (3), (4) *which you consider as **correct or most appropriate**.*

(iii) ***Mark a cross (X) on the number corresponding to your choice in the answer sheet provided.***

(iv) *Further instructions are given on the back of the answer sheet. Follow them carefully.*

1. Four angles constructed by using only the compass and a simple edge are shown below.

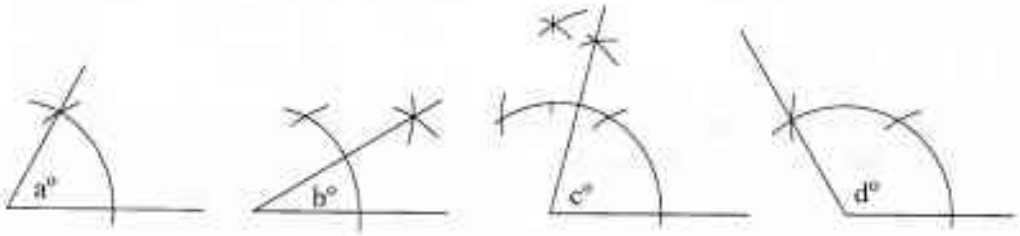

According to these sketches, the value of angles a°, b°, c°, d° respectively are

(1) 30°, 15°, 75°, 130°.
(2) 30°, 15°, 80°, 120°.
(3) 60°, 30°, 75°, 120°.
(4) 60°, 45°, 65°, 150°.

2. The geometrical figure consisting of two focuses is the

(1) circle.
(2) oval shaped circle.
(3) parabola.
(4) ellipse.

3. The four arcuate shapes are named as *A, B, C* and *D*. Some statements related to them are shown below.

P – One centre for all arcs.
Q – Arcs have four different centres.
R – Radiuses are equal.
S – Radiuses are not equal.
T – These circular lines are parallel to each other.

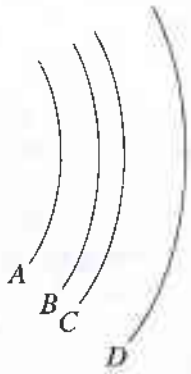

Correct statements out of the above are

(1) P, Q and R only.
(2) P, S and T only.
(3) Q, R and T only.
(4) Q, S and T only.

[see page two

4. Two dimensional figure of a cone is shown here. It is intersected by the plane of $X_1 - X_2$ inclined to mid axis. When the upper portion beyond the cutting line is removed, and looked along the mid axis of the three dimensional shape, the visible top plane view is
(1) a circle.
(2) an oval shaped circle.
(3) an ellipse.
(4) a parabola.

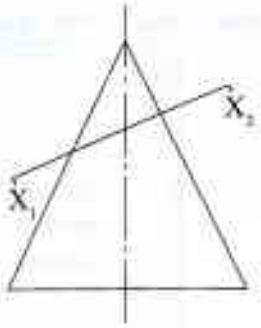

5. The length of three sides *ABC* is given in mm on the table below. What is the choice of data included, which can construct a triangle according to these data.

	Side A	Side B	Side C
(1)	100	80	40
(2)	120	80	20
(3)	150	70	80
(4)	160	90	50

6. Figure 1 shows a three dimensional shape of a box and its development is shown in figure 2.

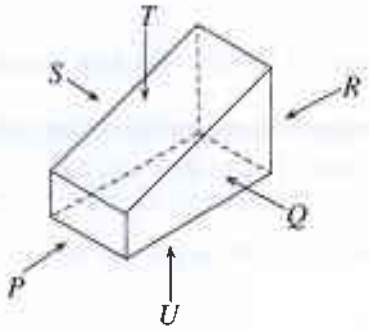

Figure 1

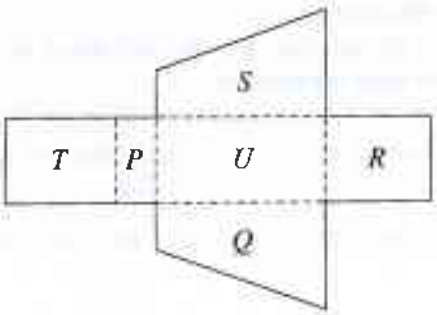

Figure 2

Out of the planes on the figure in which the development is done, select the letter that gives the plane that does **not** match with Figure 1.
(1) *P* (2) *Q* (3) *R* (4) *T*

7. In a set of wheels used for power transmission, the number of teeth in driven wheel is 108. The number of teeth in driving wheel is 18. What is the gear ratio of the cogwheel relationship?
(1) 1 : 0.17 (2) 1 : 6 (3) 1 : 12 (4) 1 : 648

8. There are different motions used in machines. What is the name of the motion which swings to both sides centering on one point?
(1) Reciprocating motion (2) Linear motion
(3) Rotary motion (4) Oscillating motion

9. What is the metal used to finish the tip of a soldering iron, an essential instrument used in soft soldering?
(1) Brass (2) Copper (3) Aluminium (4) Mild Steel

10. Several steps that should be followed in putting off the oxy-Acetylene torch, when the work is finished in gas welding are given below.
A - Closing the oxygen valve
B - Releasing the gases in both pressure regulators
C - Closing the valves in the cylinder
D - Closing the valve in the acetylene torch
What is the option that indicates the order of the above steps that should be followed?
(1) A, C, B, D (2) B, A, D, C (3) C, A, B, D (4) D, A, C, B

[see page three

11. What is the most suitable metal used in cast industry?
(1) Mild steel (2) Copper (3) Cast Iron (4) Wrought Iron

12. In finishing an item made out of mild steel sheets, to smooth the surface before painting is done, 'Putty' and 'Primer' are used and cut with sand papers. To which of the following range does the code number of the sand paper used for that belong?
(1) 80 – 100 (2) 100 – 120 (3) 150 – 300 (4) 320 – 400

13. Out of the following, what is the tool used to cut metal cubes, metal bars, metal pipes, metal wires with high thickness?
(1) grinding wheel (2) bench shear (3) hacksaw (4) flat chisel

14. What are the raw materials used in initial stage in manufacturing Iron?
(1) Lime stone, Iron ore, Coal (2) Lime stone, Charcoal, Graphite
(3) Lime stone, Graphite, Iron ore (4) Lime stone, Fire bricks, Iron ore

15. What is the technique used mainly in manufacturing the body of the vice?
(1) Filing (2) Chipping with the chisel
(3) Casting (4) Heat and Beating

16. The figure shows an accessory used in Mechanical technology. In what name is it identified?
(1) Pointed plier (2) Funnel stake
(3) Diamond chisel (4) Anvil

17. What is the suitable measuring device used to measure the thickness of an extremely thin metal sheet accurately?
(1) Vernier caliper (2) Bow caliper (3) Steel ruler (4) Micrometer

18. Melting point is the temperature in which a solid melts when it is heated. What is the option that indicates types of metals from low melting point to high melting point respectively?
(1) Lead, Zinc, Copper, Tungsten
(2) Copper, Tungsten, Lead, Zinc
(3) Zinc, Copper, Tungsten, Lead
(4) Tungsten, Copper, Zinc, Lead

19. In general, the rivets and ball pein hammer are considered essential elements in riveting work. But, what is the type of rivets that can be used without the hammer?
(1) Flat head rivet (2) Pop rivet
(3) Countersunk head rivet (4) Snap head rivet

20. What is the angle of the chisel which is used to cut a mild steel sheet size of '16 SWG'?
(1) 30° (2) 45° (3) 55° (4) 60°

21. It is a characteristic of a standard workshop to have the fire extinguishers ready. To identify what type of fire extinguishers is 'blue' colour used?
(1) Fire extinguishers with dry chemicals
(2) Carbon dioxide fire extinguisher
(3) Foam fire extinguisher
(4) Water fire extinguisher

22. What is the type of flux used in soft welding, to join the seams of an article, made of thin tin sheets?
(1) Dilute Hydrochloric Acid (2) Zinc Chloride solution
(3) Thinly prepared Resin powder (4) Dilute Sulphuric Acid

[see page four

23. What is the option that indicates the tools and equipment necessary to make a mechanical device with 4 cams, in 5 mm thick mild steel sheet as shown in the figure?

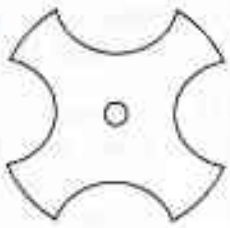

(1) Square file, Half round file, Drilling machine, Hacksaw
(2) Square file, Triangular file, Drilling machine, Hacksaw
(3) Square file, flat file, Hacksaw, Drilling machine
(4) Square file, Round file, Drilling machine, Chisel

24. What is the mathematical equation used to calculate the diameter of the suitable rivet to connect two sheets by riveting work?

Consider, that D denotes, Diameter of the rivet and t denotes Thickness of the sheets.

(1) $D = 2 \times t$ (2) $D = 1\frac{3}{4} \times t$ (3) $D = 1\frac{1}{2} \times t$ (4) $D = 1\frac{1}{4} \times t$

25. What is the tool that should be used to cut along the marked straight line on a mild steel sheet of 26 SWG (.5 mm)?

(1) Bench shear (2) Hacksaw (3) Flat chisel (4) Straight snip

26. What is the option that indicates three elements which are required to catch fire?
(1) Combustible material, Oxygen, Heat
(2) Fuel, Air, Combustible material
(3) Combustible material, Oil, Oxygen
(4) Sunlight, Combustible material, Wind

27. What are the two types of metals mixed to manufacture brass?
(1) Copper and Lead (2) Copper and Zinc
(3) Copper and Tin (4) Copper and Aluminium

28. What is the material which contains all the properties like plasticity, malleability, hardness, characteristic colour?
(1) Metal (2) Plastic (3) Timber (4) Rubber

29. What is the gas, which helps to burn and is colourless, non-poisionous, odourless and is used for welding industry?
(1) Carbon dioxide (2) Nitrogen (3) Oxygen (4) Acetylene

30. What is the main advantage of a Galvanized Iron Sheet?
(1) Colour coated (2) Resistance to corrosion
(3) Easy to rivet (4) Easy to weld

31. In a four stroke petrol engine, to open the valves, the reciprocating motion is mainly accomplished by
(1) valve springs. (2) push rod. (3) rocker. (4) cam shaft.

32. What is the method of brake system that functions using levers and wires?
(1) Vaccum method (2) Mechanical method
(3) Hydraulic method (4) High pressure air system

33. What is the function of the condensor used in the ignition system of petrol vehicles?
(1) Reducing the burning of spark plugs
(2) Controlling the high voltages
(3) Minimizing the burning of contact breakers
(4) Reducing the battery discharge

34. What is, the space between two strokes in a single cylinder two stroke petrol engine in degrees?
(1) 90° (2) 180° (3) 360° (4) 720°

[see page five

35. What is the distance a new vehicle engine should run for first changing of its lubricating oil and oil filters?
(1) 600 km (2) 700 km (3) 750 km (4) 800 km

36. When the driving chain of a motor bicycle is adjusted, how much is the 'free flow' of the chain?
(1) 5 mm – 10 mm (2) 12 mm – 18 mm (3) 15 mm – 20 mm (4) 15 mm – 25 mm

37. What is the power transmission accessory shown in the diagram?
(1) Bevel gear
(2) Double helical gear
(3) Worm gear
(4) Rack and pinion

38. It is observed that the head light of the motor bicycle is excessively bright. The lamps also burn out frequently. What could be the nearest cause for this situation?
(1) Increase in the power generation of the magnito
(2) Battery wires are disconnected
(3) Battery is excessively charged
(4) Running at high speed during nights

39. It is a good habit of a driver, to check up the lubricating oil level before starting the engine. Although, one day when the engine was started for the first time, switched off and checked up the lubricating oil level, correct data were not received. What is the cause for it?
(1) Volume of lubricating oil changes when it is hot
(2) Lubricating oil is stagnated in the oil passage
(3) Oil is stagnated in oil filter
(4) When oil is hot, the viscocity of lubricating oil changes

40. What is the most efficient cooling system used in new motor cars?
(1) Thermo-syphon circulation system
(2) Air cooling system with blower
(3) Air cooling system without blower
(4) Force feed liquid circulation system

* *

[see page six

ශ්‍රී ලංකා විභාග දෙපාර්තමේන්තුව
இலங்கைப் பரீட்சைத் திணைக்களம்
Department of Examinations, Sri Lanka

89 E I, II

අධ්‍යයන පොදු සහතික පත්‍ර (සාමාන්‍ය පෙළ) විභාගය, 2019 දෙසැම්බර්
கல்விப் பொதுத் தராதரப் பத்திர (சாதாரண தர)ப் பரீட்சை, 2019 டிசெம்பர்
General Certificate of Education (Ord. Level) Examination, December 2019

නිර්මාණකරණය හා යාන්ත්‍රික තාක්ෂණවේදය I, II
வடிவமைப்பும் இயந்திரத் தொழினுட்பவியலும் I, II
Design and Mechanical Technology I, II

Design and Mechanical Technology II

※ *Answer **five** questions only selecting the **first** question and **four** others.*

1. (i) Following figure shows an isometric view of an object.

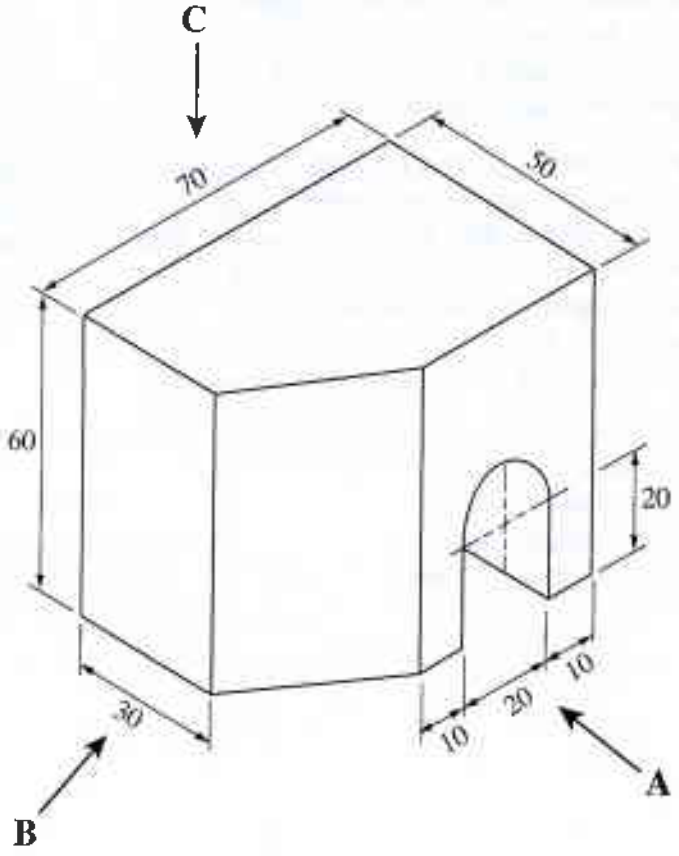

(All dimensions are in millimetres.)

Draw the following views of above isometric drawing according to third angle projection.

Front elevation, seen through direction of arrow **A**

Side elevation, seen through direction of arrow **B**

Plan, seen through direction of arrow **C**

Used scale should be 1:1.

(ii) Draw two circles with 25 mm radius of each with 100 mm distance between two centers and draw common external tangent.

[see page seven

2. Cooling systems are used to maintain the continuous performance of an Engine.
   (i) Mention **two** methods of removing the balance heat energy, out of which 25% is used from the producing heat energy of an Internal Combustion Engine.
   (ii) It was observed the water leakage near the axis shaft of the water pump in an engine. State the cause for it and mention the action has to be taken to correct that defect.
   (iii) Explain the functions of the radiator of an engine with pump type cooling system.

3. Figure shows a metal corrugated sheet sunshade used for 120 cm long window.

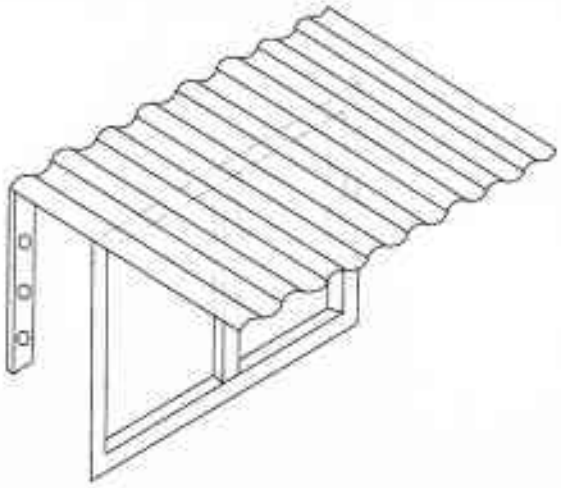

   (i) Indicate with a sketch, that the way how to form the frame for this.
   (ii) Present a list of material required for the frame in above (i).
   (iii) Explain the method of assembling the parts of the frame and how the frame is mounted on the wall.

4. Different energies are used to get the work done.
   (i) What is meant by power?
   (ii) Mention **four** examples for power transmission that takes place in day to day activities.
   (iii) There are several types of gear wheels according to the method of drive system. Draw diagrams and name them.

5. Different methods are used to highlight the safety and aesthetic aspects of metal ware. The raw material used for these are very important as well.
   (i) State **three** advantages of oxydizing metal wares.
   (ii) Describe the methodology used to protect the external surface for a short period before finishing the articles manufactured out of steel.
   (iii) Name **three** chemicals used to colour metals and describe **three** methods used to paint them.

6. The method of manufacturing articles by casting has a long history.
   (i) State the **four** methods of finishing the articles manufactured by casting.
   (ii) Describe **three** defects of the articles manufactured by casting.
   (iii) Explain briefly, the methods of preventing the defects stated in (ii) above.

7. When following a technological and vocational course, attention should be paid to the recognition of certificates and job opportunities available.
   (i) In which institution should the NVQ course 'Assessors' be registered?
   (ii) Describe the main points that have to be considered, when following a training course in a private training institute.
   (iii) Explain what is meant by RPL, in issuing NVQ certificates.

* * *